FORENO Standard Bath Spout

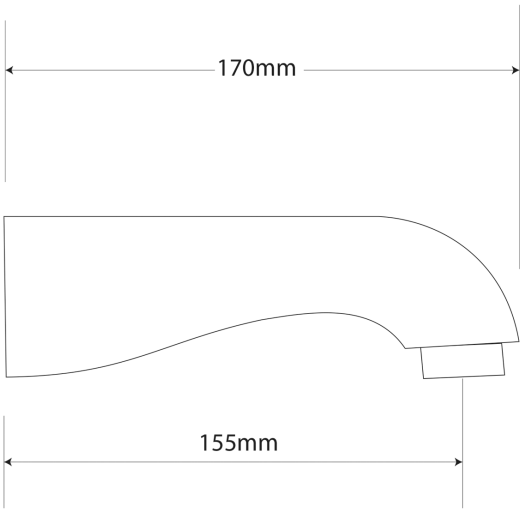

PRODUCT CODE	**BF7**
COLOUR/FINISHES	Chrome
PRESSURE TYPE	All Pressures
MIN. PRESSURE	35kPa
MAX. PRESSURE	500kPa (As per NZ Building Code AS/NZ 3500.1)
MAX. TEMPERATURE	65°C
PLUMBING CONNECTION	15mm
SPOUT LENGTH	170mm
SPOUT REACH	155mm

Specifications and dimensions are subject to change without notice.

Installation instructions are available from the product page on www.foreno.co.nz

Foreno Tapware products are in full compliance with the requirements as set out in the New Zealand Building Code: www.foreno.co.nz/building-code-clauses/

This product is not subject to a warning or ban under section 26 of the Building Act 2004.