ESPREE Shower Rose - Multi-Function

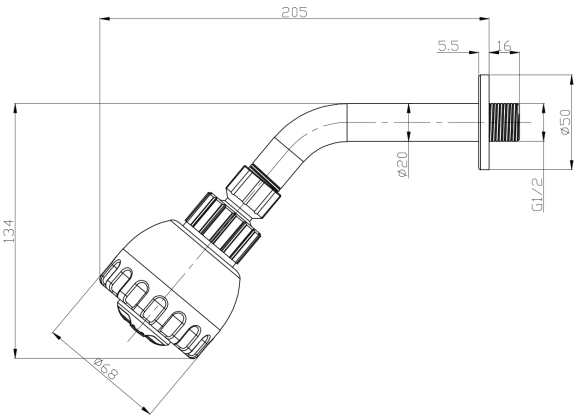

PRODUCT CODE	**ESR3**
COLOUR/FINISHES	Chrome/Grey
PRESSURE TYPE	Mains Pressure only
MIN. PRESSURE	150kPa
MAX. PRESSURE	500kPa (As per NZ Building Code AS/NZ 3500.1)
MAX. TEMPERATURE	65°C
WELS RATING	Mains 3 Star; 7.5L/min
PLUMBING CONNECTION	15mm
EXCLUSIVE TO	Bunnings Warehouse

Specifications and dimensions are subject to change without notice.

Installation instructions are available from the product page on www.foreno.co.nz

Foreno Tapware products are in full compliance with the requirements as set out in the New Zealand Building Code: www.foreno.co.nz/building-code-clauses/

This product is not subject to a warning or ban under section 26 of the Building Act 2004.