LE TAP MINIMO II Coil Sink Mixer

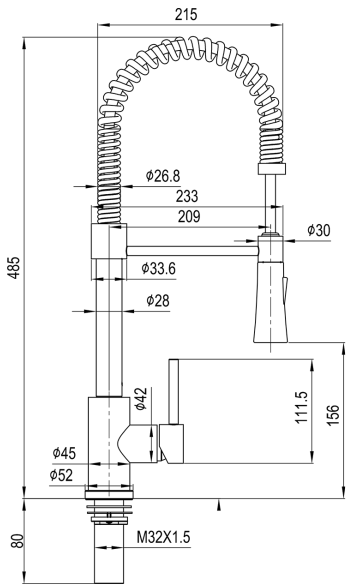

PRODUCT CODE	**LTM13LFCH**
COLOUR/FINISHES	Chrome
PRESSURE TYPE	Mains Pressure only
MIN. PRESSURE	150kPa
MAX. PRESSURE	500kPa (As per NZ Building Code AS/NZ 3500.1)
WELS RATING	Mains 4 Star; 6L/min
MAX. TEMPERATURE	65°C
PLUMBING CONNECTION	15mm
EXCLUSIVE TO	Mitre 10
CARTRIDGE TYPE	FORPT231 – Cold Start 35mm Ceramic Cartridge

Specifications and dimensions are subject to change without notice.

Installation instructions are available from the product page on www.foreno.co.nz

Foreno Tapware products are in full compliance with the requirements as set out in the New Zealand Building Code: www.foreno.co.nz/building-code-clauses/

This product is not subject to a warning or ban under section 26 of the Building Act 2004.